Particle Boron LTE

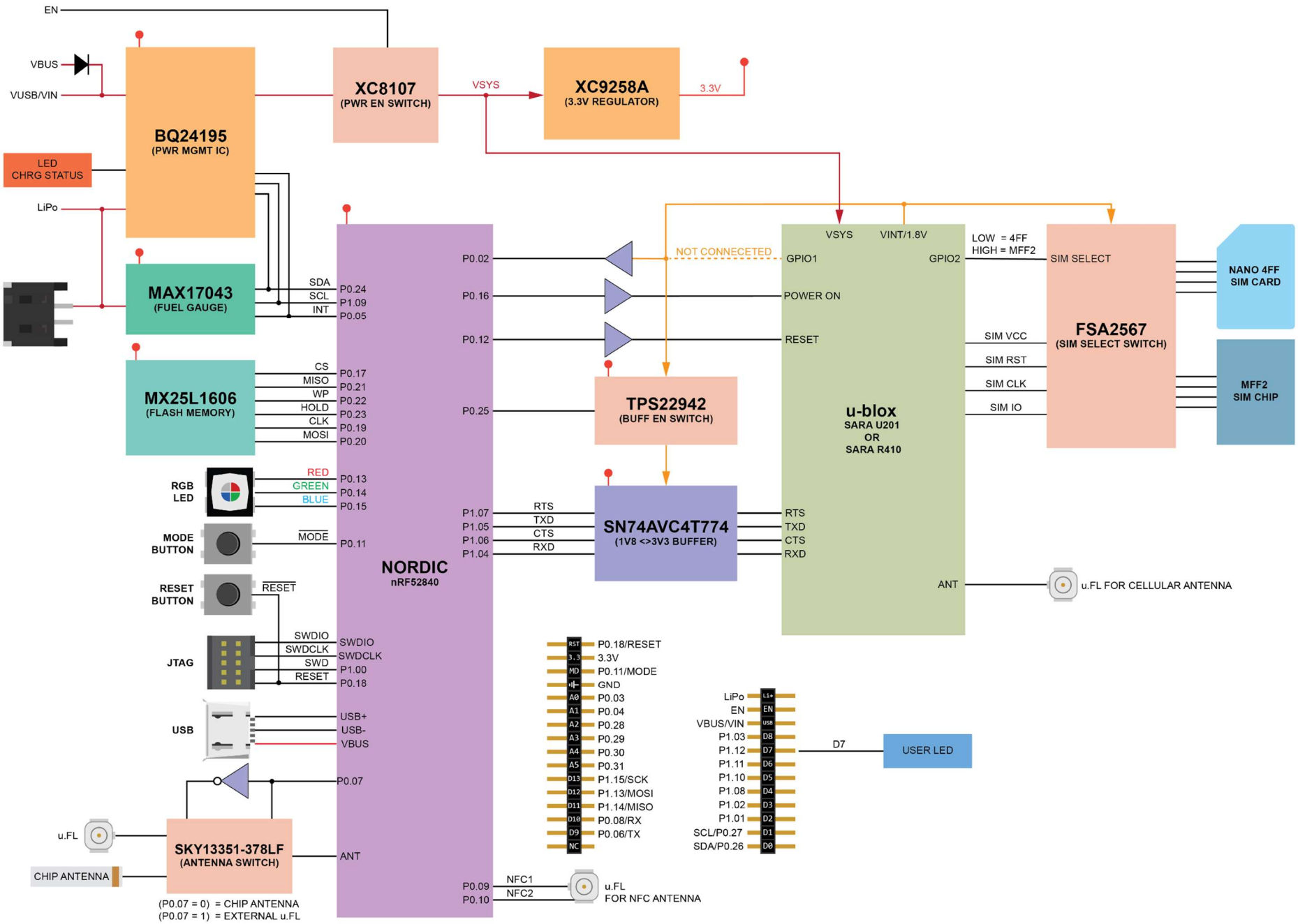

2019